WM-FX495

SERVICE MANUAL

US Model
AEP Model

Ver. 1.2 2005.12

Model Name Using Similar Mechanism	NEW
MD Mechanism Type	MF-WMFX495-147

SPECIFICATIONS

- **Frequency range**
  FM : 87.5 - 108 MHz
  AM: 530 - 1 710 kHz (North, America)
  531 - 1 602 kHz (Other countries)
- **Output**
  Headphones (🎧) jack Load impedance 8 - 300 Ω
- **Power requirements**
  1.5V DC, battery R6 (size AA) x 1
- **Dimensions (w/h/d)**
  Approx. 81.1 x 111.2 x 29.3 mm (3¼ x 4½ x1 3/16 in.), excl. projecting parts and controls
- **Mass**
  Approx. 137 g (4.9 oz) (main unit only)
- **Supplied accessories**
  Stereo headphones or earphones with remote control (1)
  Carrying case or Carrying pouch or Hand strap (1)

Design and specifications are subject to change without notice.

Battery life* (approximate hours)

	Sony alkaline LR6 (SG)**	Sony R6P (SR)
Tape playback	35	9
Radio reception	40	14

* Measured value by the standard of JEITA (Japan Electronics and Information Technology Industries Association).
(Using a Sony HF series cassette tape)
**When using a Sony LR6(SG) "STAMINA" alkaline dry battery (produced in Japan).

Note
- The battery life may be shorter depending on the operating condition, the surrounding temperature and battery type.

RADIO CASSETTE PLAYER

9-877-098-03
2005L02-1
© 2005.12
Sony Corporation
Personal Audio Division
Published by Sony Engineering Corporation

SONY®

TABLE OF CONTENTS

Specifications 1

1. SERVICING NOTE 3

2. GENERAL 4

3. DISASSEMBLY
3-1. Cabinet (Front)Sub Assy 5
3-2. Main Board 6
3-3. Mechanism Deck 6
3-4. Cassette Holder Sub Assy 7

4. ADJUSTMENTS
4-1. Mechanical Adjustments 8
4-2. Electrical Adjustments 8

5. DIAGRAMS
5-1. Block Diagram 11
5-2. Printed Wiring Boards 12
5-3. Schematic Diagram –Main Section (1/2)– 13
5-4. Schematic Diagram –Main Section (2/2)– 14
5-5. IC Block Diagrams 15

6. EXPLODED VIEWS
6-1. Cabinet Section 17
6-2. Mechanism Deck Section
(MF-WMFX495-147) 18

7. ELECTRICAL PARTS LIST 19

Flexible Circuit Board Repairing

- Keep the temperature of the soldering iron around 270°C during repairing.
- Do not touch the soldering iron on the same conductor of the circuit board (within 3 times).
- Be careful not to apply force on the conductor when soldering or unsoldering.

Notes on chip component replacement

- Never reuse a disconnected chip component.
- Notice that the minus side of a tantalum capacitor may be damaged by heat.

SECTION 1
SERVICING NOTES

This set detects the rotation of the idler gear (A) (side S) using the photo reflector (PH751). The PH751 is mounted on the MAIN board, therefore the idler gear (A) (side S) cannot be detected with the MAIN board removed. As a result, the motor (M601) cannot be controlled, causing malfunction.
Further, the MD CONT switch (S601) is also mounted on the MAIN board, and with the board removed, the mechanism position cannot be detected and the operation is not changed over.
Therefore, when the voltage check is executed with the MAIN board removed, follow the procedure provided below.

1. Setting
1) Refer to "3. DISASSEMBLY", and remove the MAIN board.
2) Connect the MAIN board to the motor (M601) using jumper wires. These can be connected easily with the use of the extension tool (Part No. 1-769-143-11) (ten in one set).
3) Connect the AF oscillator to the TP752 and the BT401 (BATT–).
4) Supply 1.5 V to the battery terminals using the regulated power supply.

2. Preset state
To set the PLAY, FF, REW modes, the preset state must be set.
1) Check that the slider (NRA) and the MD CONT switch (S601) are set to the center position. If not, set the preset state as follow.
2) Move the MD CONT switch (S601) to the side, which the slider (NRA) is facing.
3) The slider (NRA) will move when the regulated power supply switch is set to OFF once and then set to ON. Move the MD CONT switch (S601) according to this timing and set to the center position.

3. FF, REW modes
1) Check that the preset state is set.
2) Input the square wave or sine wave to the TP752 and the BT401 (BATT–).
3) Press the FF button or REW button .

4. PLAY mode
1) Check that the preset state is set.
2) Input the square wave to the TP752 and the BT401 (BATT–).
3) Press the ◀▶ button will move the slider (NRA) once towards the side REV and then to the side FWD. Move the MD CONT switch (S601) according to this timing will set the PLAY mode (side FWD). Press the ◀▶ button another time for a second and move the MD CONT switch (S601) according to the movement of the slider (NRA) will set the PLAY mode (side REV).

Note 1: If the above fails, perform from preset again.
Note 2: When using headphones, the timing for move the MD CONT switch (S601) can be determined from the beep sound.

– MAIN Board (Component Side) –

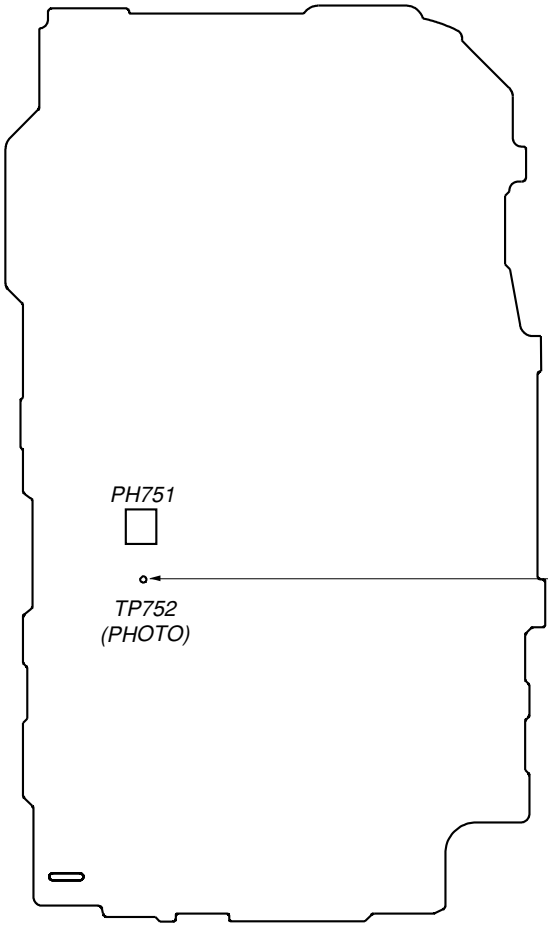

– MAIN Board (Conductor Side) –

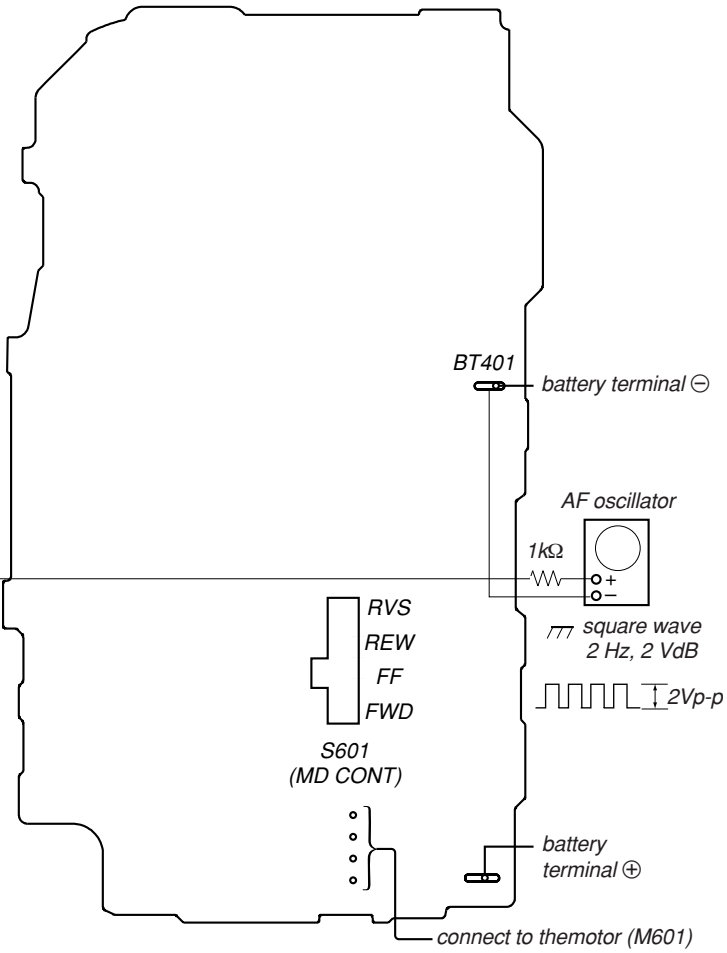

SECTION 2
GENERAL

This section is extracted from instruction manual.

LOCATING THE CONTROLS

–Tape mode–

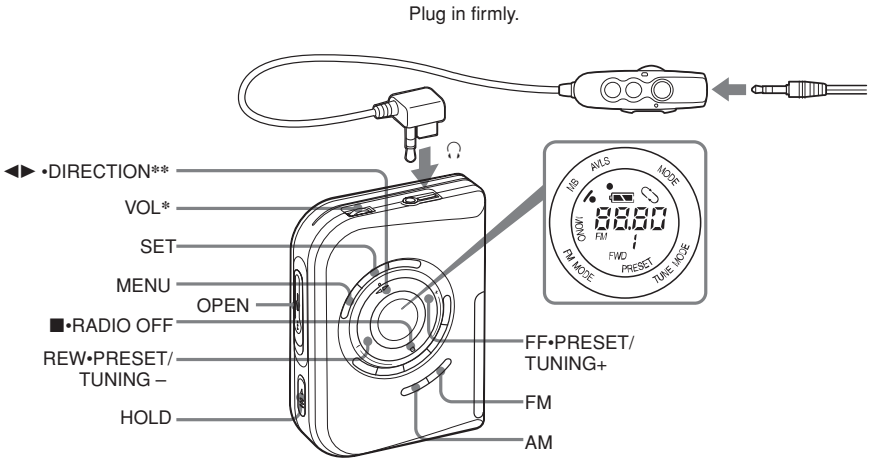

* There is a tactiledot beside VOL on the main unit to show the direction to turn up the volume.
** The button has a tactile dot.

–Radio mode–

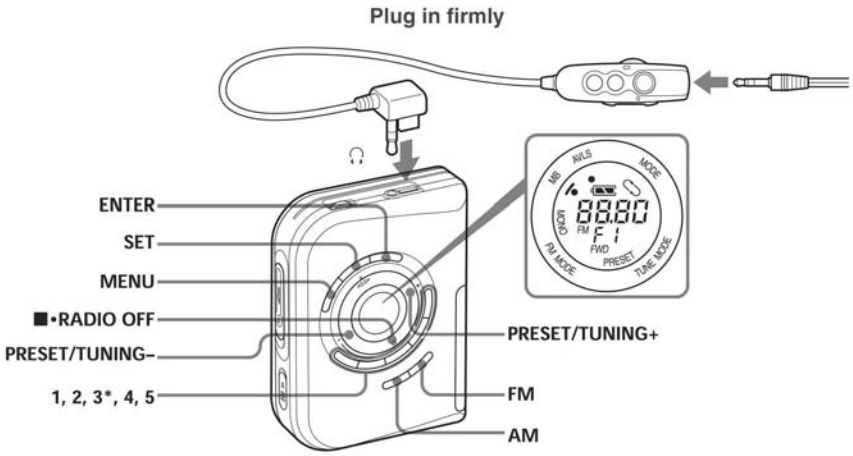

* The button has a tactile dot.

SECTION 3
DISASSEMBLY

● The equipment can be removed using the following procedure.

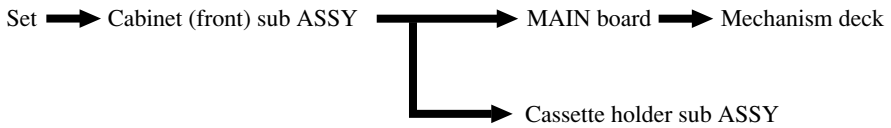

Note : Follow the disassembly procedure in the numerical order given.

3-1. CABINET (FRONT) SUB ASSY

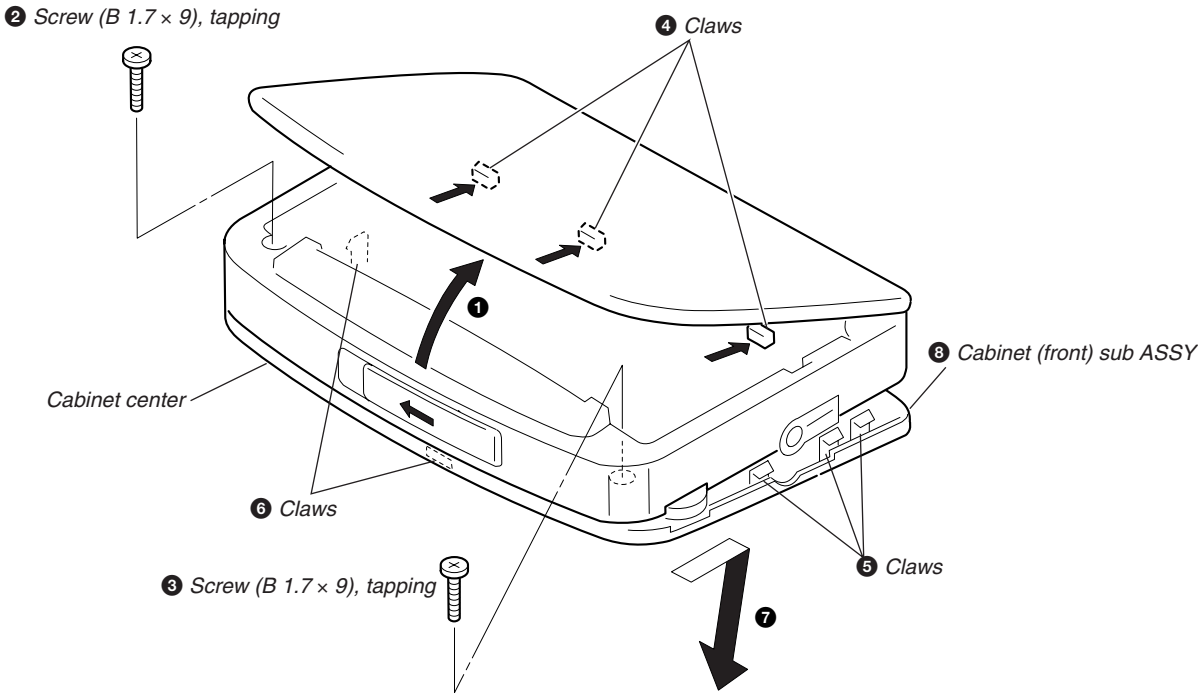

3-2. MAIN BOARD

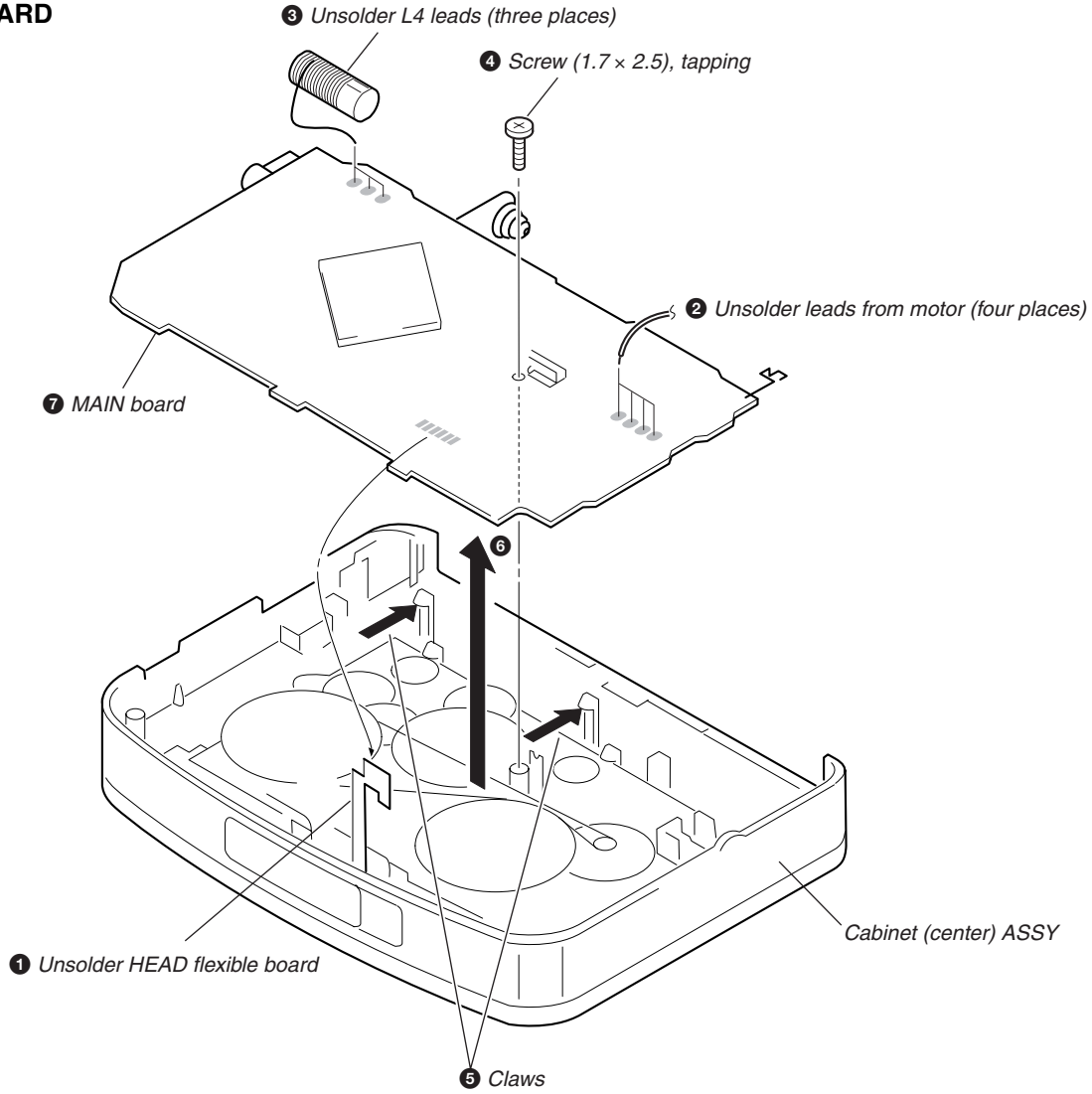

3-3. MECHANISM DECK

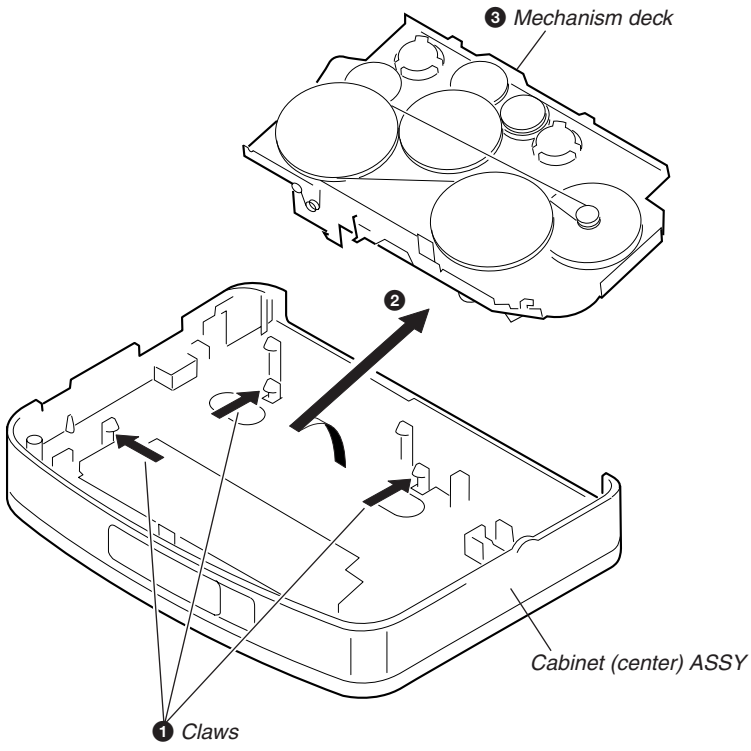

3-4. CASSETTE HOLDER SUB ASSY

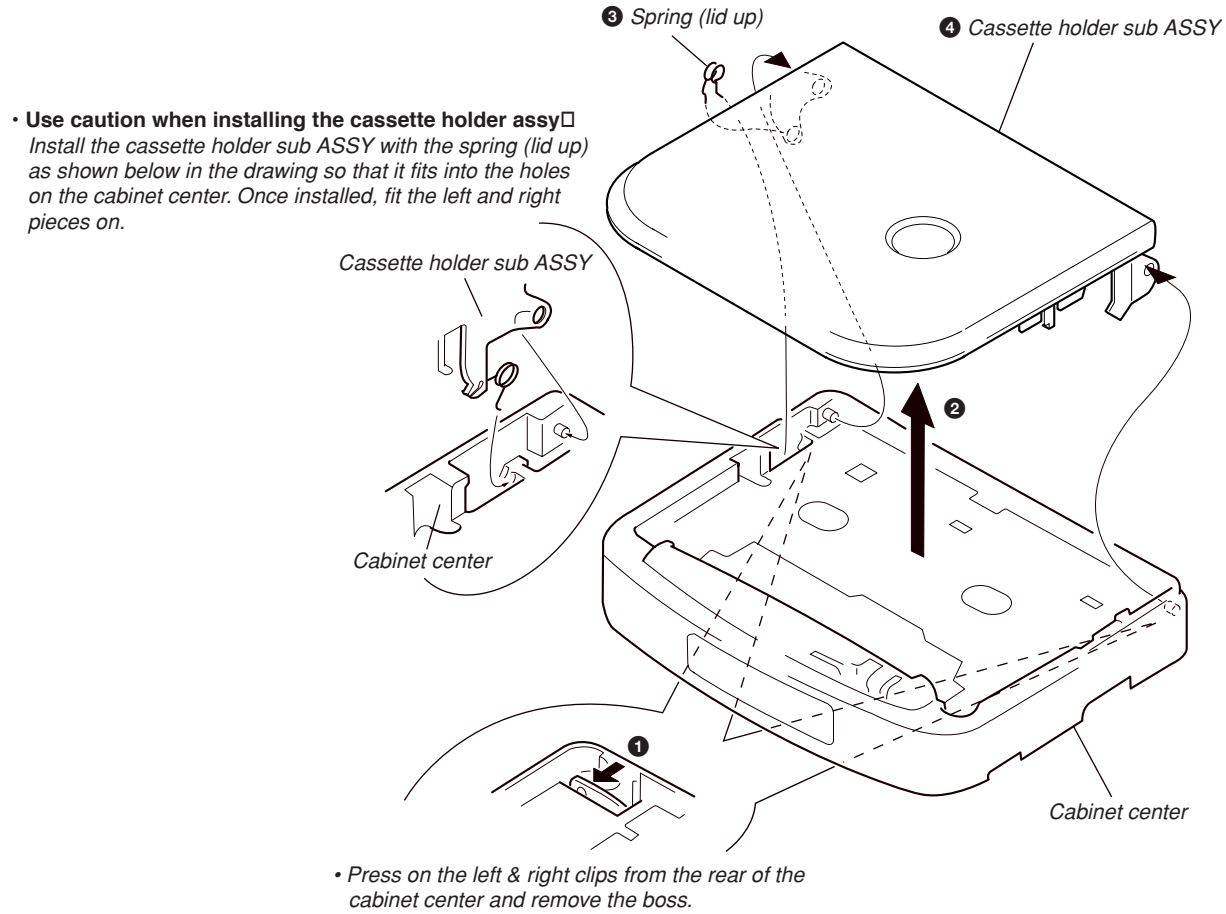

SECTION 4
ADJUSTMENTS

4-1. MECHANICAL ADJUSTMENTS

PRECAUTION

1. Clean the following parts with a denatured-alcohol-moistened swab :
   playback head　　pinch roller
   capstan　　rubber belt
2. Demagnetize the playback head with a head demagnetizer. Do not use a magnetized screwdriver for the adjustments.
3. These measurement and adjustment should be performed with the rated power supply voltage (1.5 V) unless otherwise noted.

Torque Measurement

Mode	Torque meter	Meter reading
FWD	CQ-102C	1.97 – 4.11 mN • m 20 – 42 g • cm (0.28 – 0.58 oz• inch)
FWD back tension		less than 0.19 mN • m less than 2 g • cm (less than 0.027 oz• inch)
REV	CQ-102RC	1.97 – 4.11 mN • m 20 – 42 g • cm (0.28 – 0.58 oz• inch)
REV back tension		less than 0.19 mN • m less than 2 g • cm (less than 0.027 oz• inch)
FF, REW	CQ-201B	more than 5.89 mN • m more than 60 g • cm (more than 0.84 oz• inch)

4-2. ELECTRICAL ADJUSTMENTS

PRECAUTION

- Supplied voltage : 1.5V.
- Switch and control position
  VOLUME control (RV301) : maximum
  HOLD : OFF

TAPE SECTION　　0 dB = 0.775V

Test Tape

Type	Signal	Used for
WS-48A	3kHz, 0dB	Tape Speed Adjustment

Tape Speed Adjustment

Procedure :

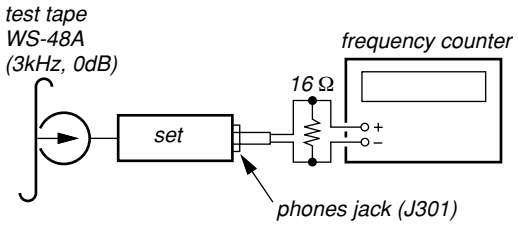

1. Playback WS-48A (tape center part) in the FWD state and adjust RV601 so that the frequency counter reading becomes 3,000Hz.
   Standard value : 2,910–3,090Hz
2. Playback WS-48A (tape center part) in the REV state.
   Check that frequency counter reading is within ±1.5% (apporox.45Hz) of the reading of step 1.

Adjustment Location :

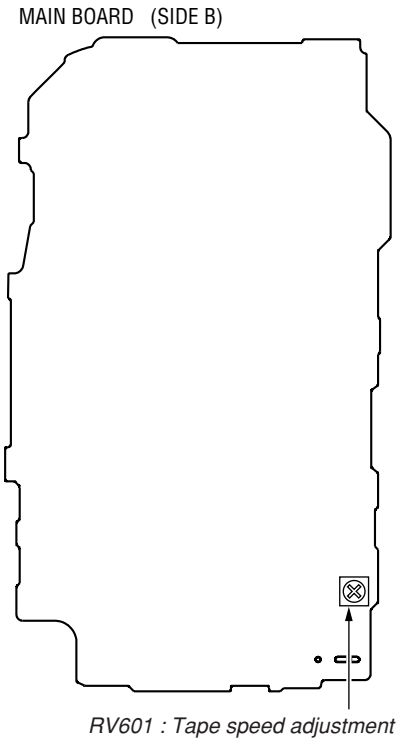

TUNER SECTION

0 dB = 1μV

AM section

BAND : AM

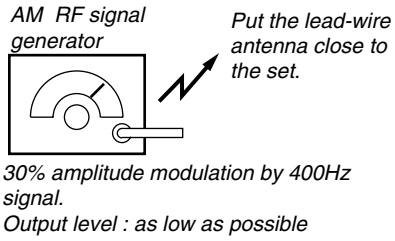

FM section

BAND :FM

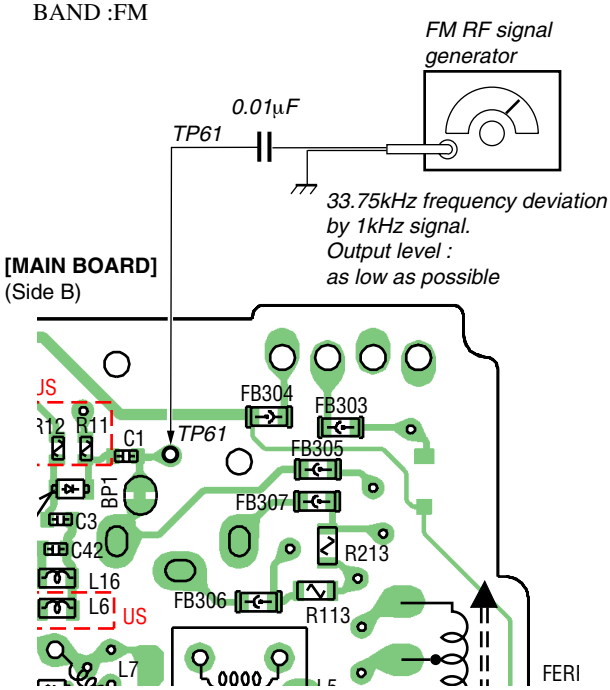

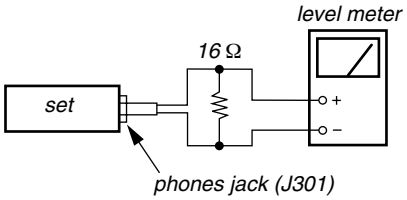

- Repeat the procedures in each adjustment several times, and the frequency coverage and tracking adjustments should be finally done by the trimmer capacitors.

no mark : US
< > : AEP

AM FREQUENCY COVERAGE ADJUSTMENT		
Adjust parts	Frequency display	Reading on digtal voltmeter
L5	530kHz <531kHz>	Adjustment value : 1.2V Standard value : 1.05–1.35V
Confirmation	1,710kHz <1,602kHz>	Standard value : 8.5V or less

AM TRACKING ADJUSTMENT	
Adjust for a maximum reading on level meter.	
L4	620kHz <621kHz>
CT1	1,400kHz <1,395kHz>

FM FREQUENCY COVERAGE CONFIRMATION		
	Frequency display	Reading on digtal voltmeter
Confirmation	87.5MHz	Adjustment value : 4.6V Standard value : 4.1–5.1V
	108MHz	Adjustment value : 7.8V Standard value : 6.8–8.8V

FM TRACKING ADJUSTMENT	
Adjust for a maximum reading on level meter.	
L7	98.0MHz

Adjustment Location : Main board

Frequency Coverage Adjustment
Setting :

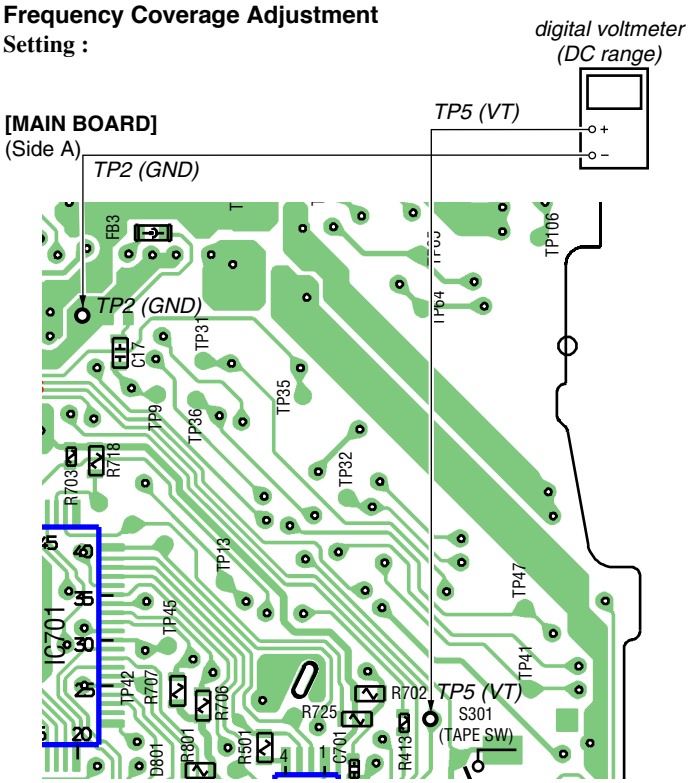

Adjustment Location :

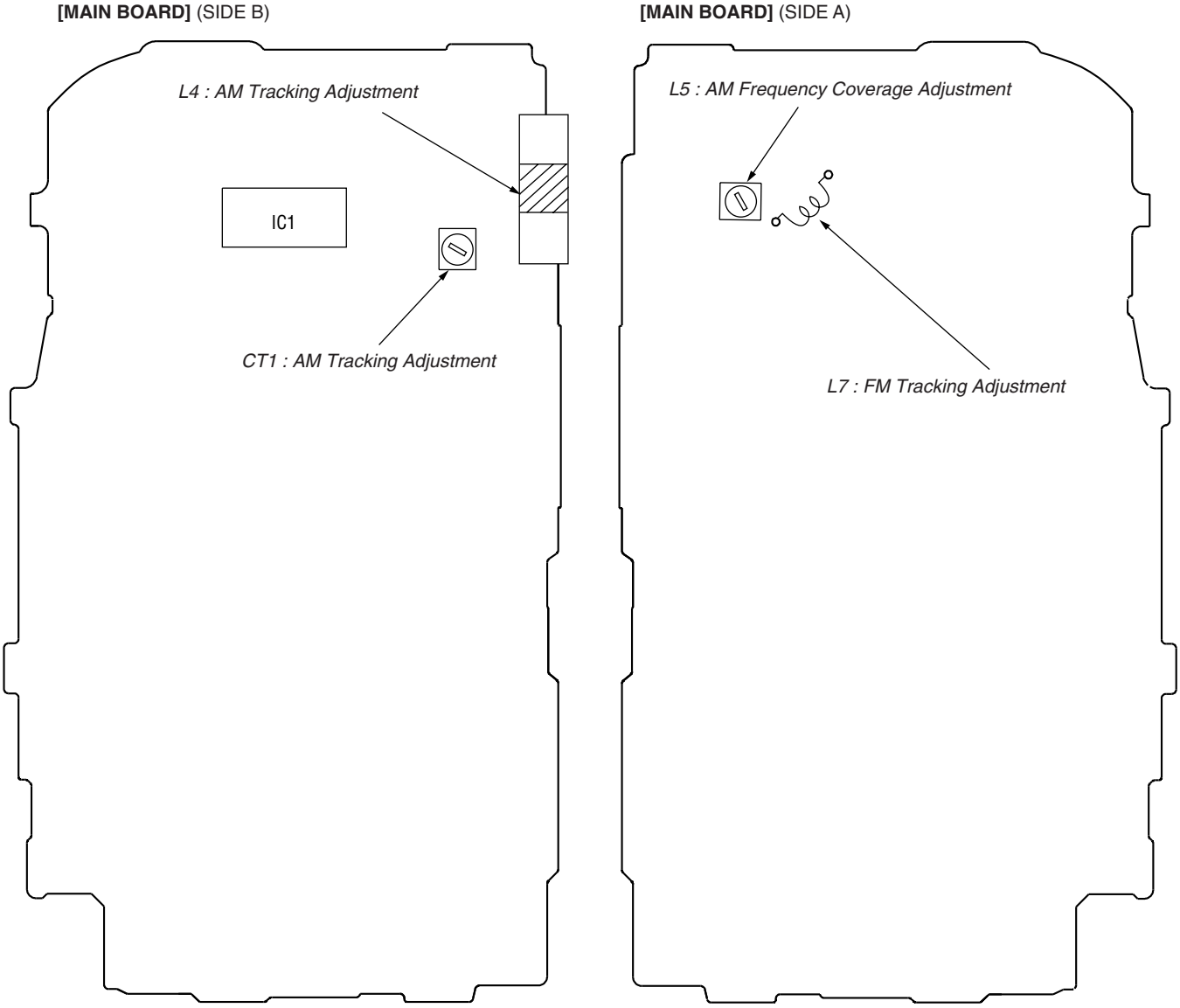

SECTION 5
DIAGRAMS

5-1. BLOCK DIAGRAMS

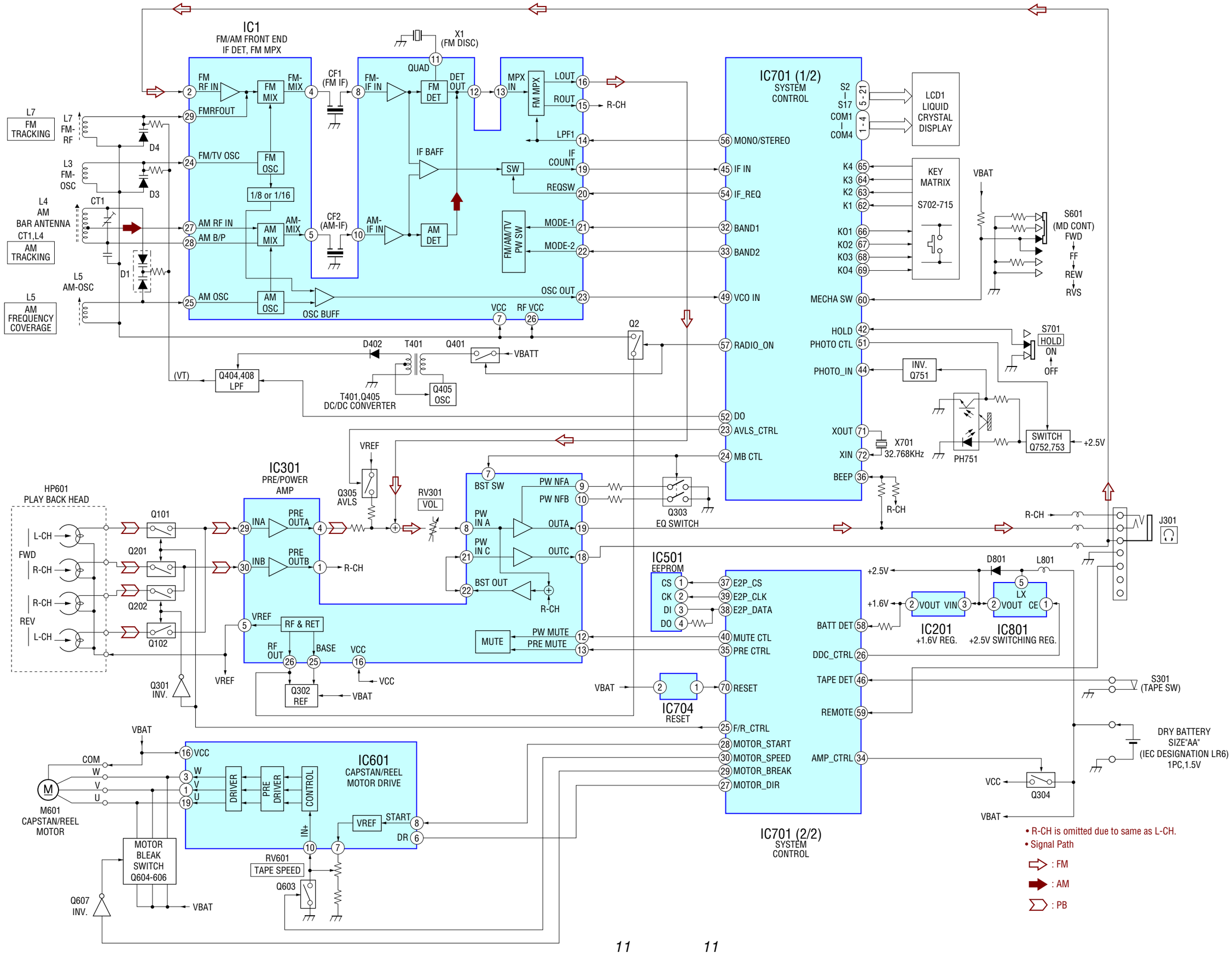

5-2. PRINTED WIRING BOARDS

● See page 15 for Notes.

【MAIN BOARD 】(SIDE A)

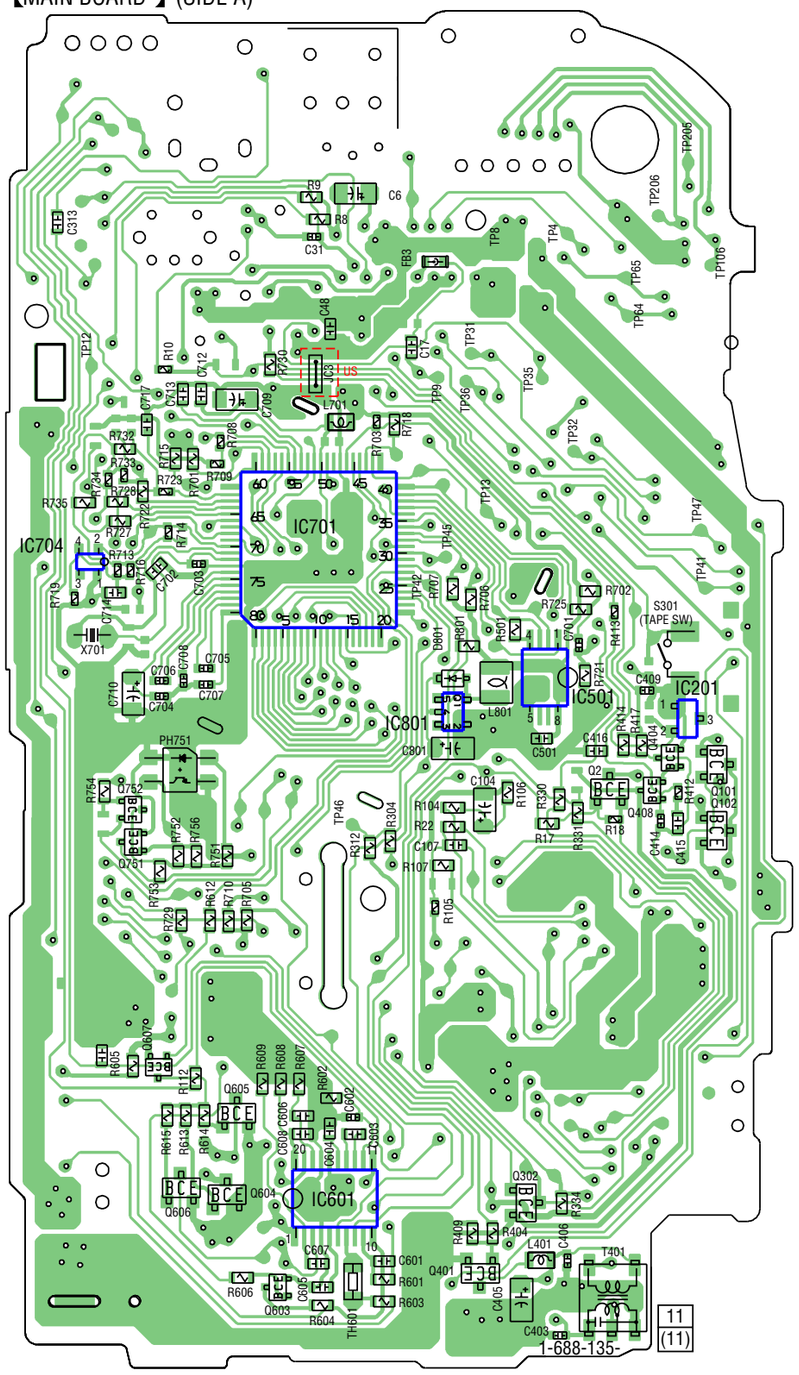

【MAIN BOARD 】(SIDE B)

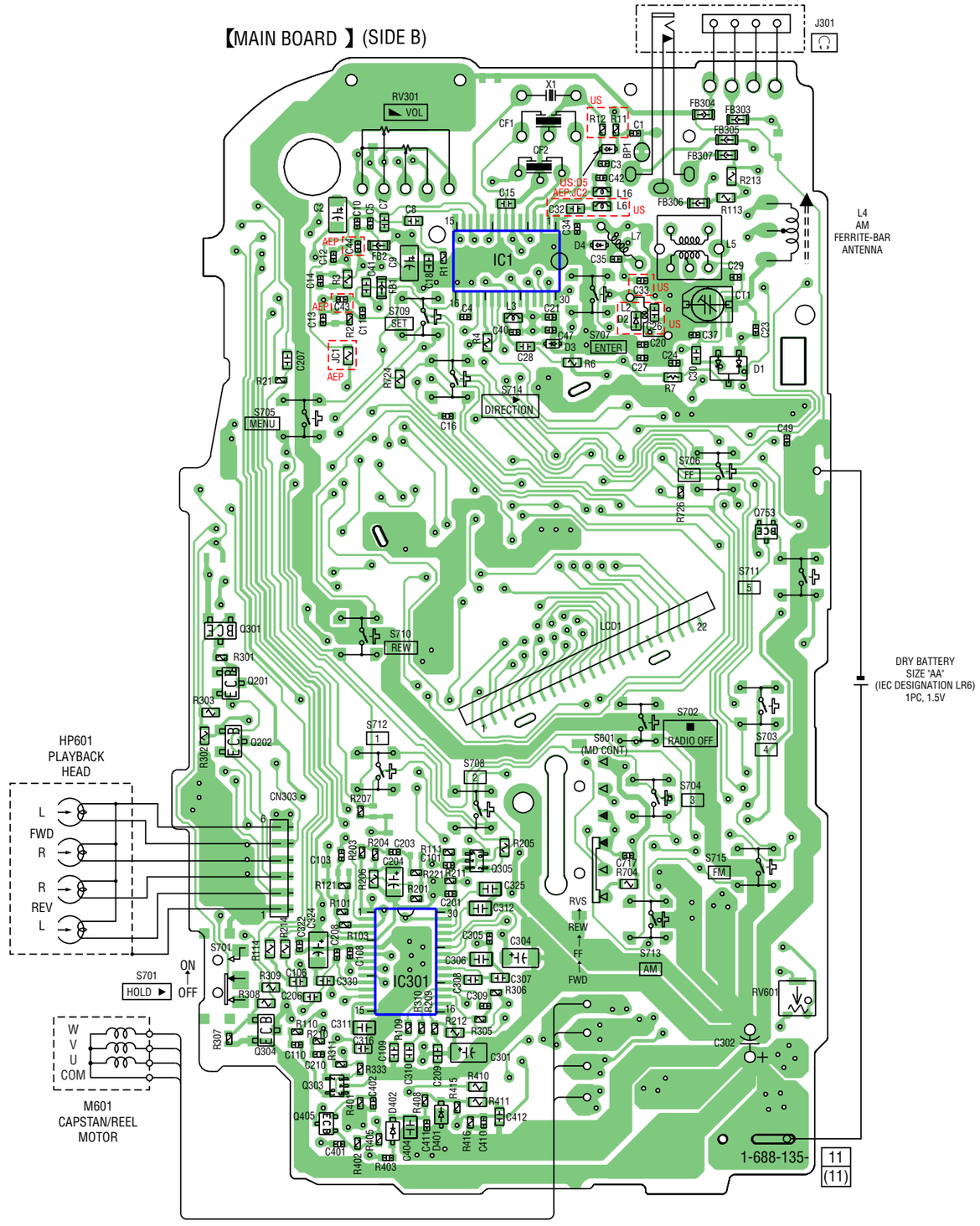

● **Semiconductor Location**

Ref. No.	Location
D1	C-9
D2	B-8
D3	C-8
D4	B-8
D5	A-8
D401	G-7
D402	G-7
D801	D-3
IC1	B-8
IC201	D-4
IC301	F-7
IC501	D-3
IC601	F-2
IC701	C-2
IC704	C-1
IC801	D-3
PH751	D-2
Q2	D-4
Q101	D-4
Q102	E-4
Q201	D-6
Q202	E-6
Q301	D-6
Q302	F-3
Q303	G-7
Q304	F-6
Q305	E-8
Q401	G-3
Q404	D-4
Q405	G-7
Q408	E-4
Q603	G-2
Q604	F-2
Q605	F-2
Q606	F-2
Q607	F-2
Q751	E-1
Q752	E-1
Q753	C-9

5-3. SCHEMATIC DIAGRAM –MAIN SECTION (1/2) –

● See page 15 for Notes.

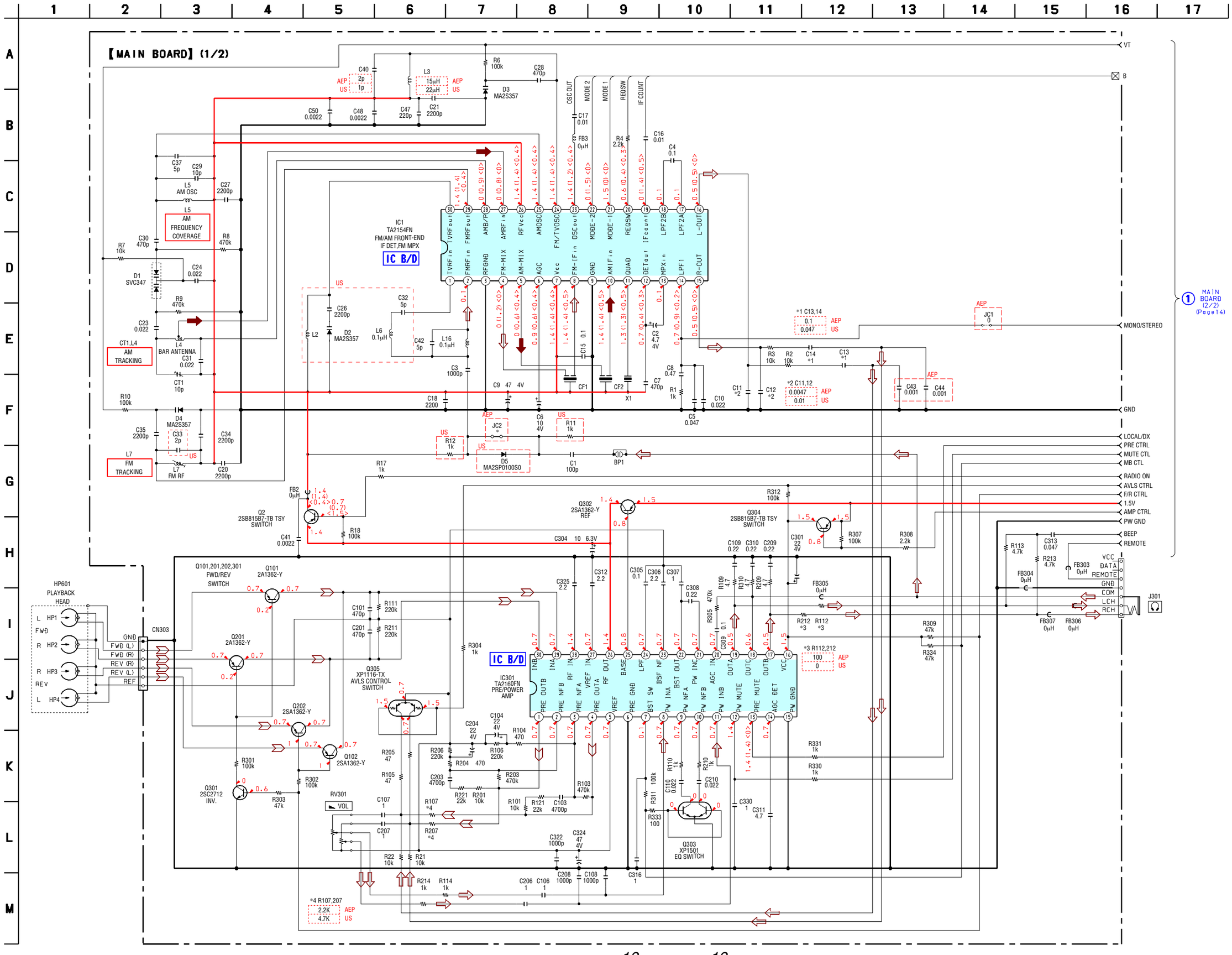

5-4. SCHEMATIC DIAGRAM –MAIN SECTION (2/2) –

● See page 15 for Notes.

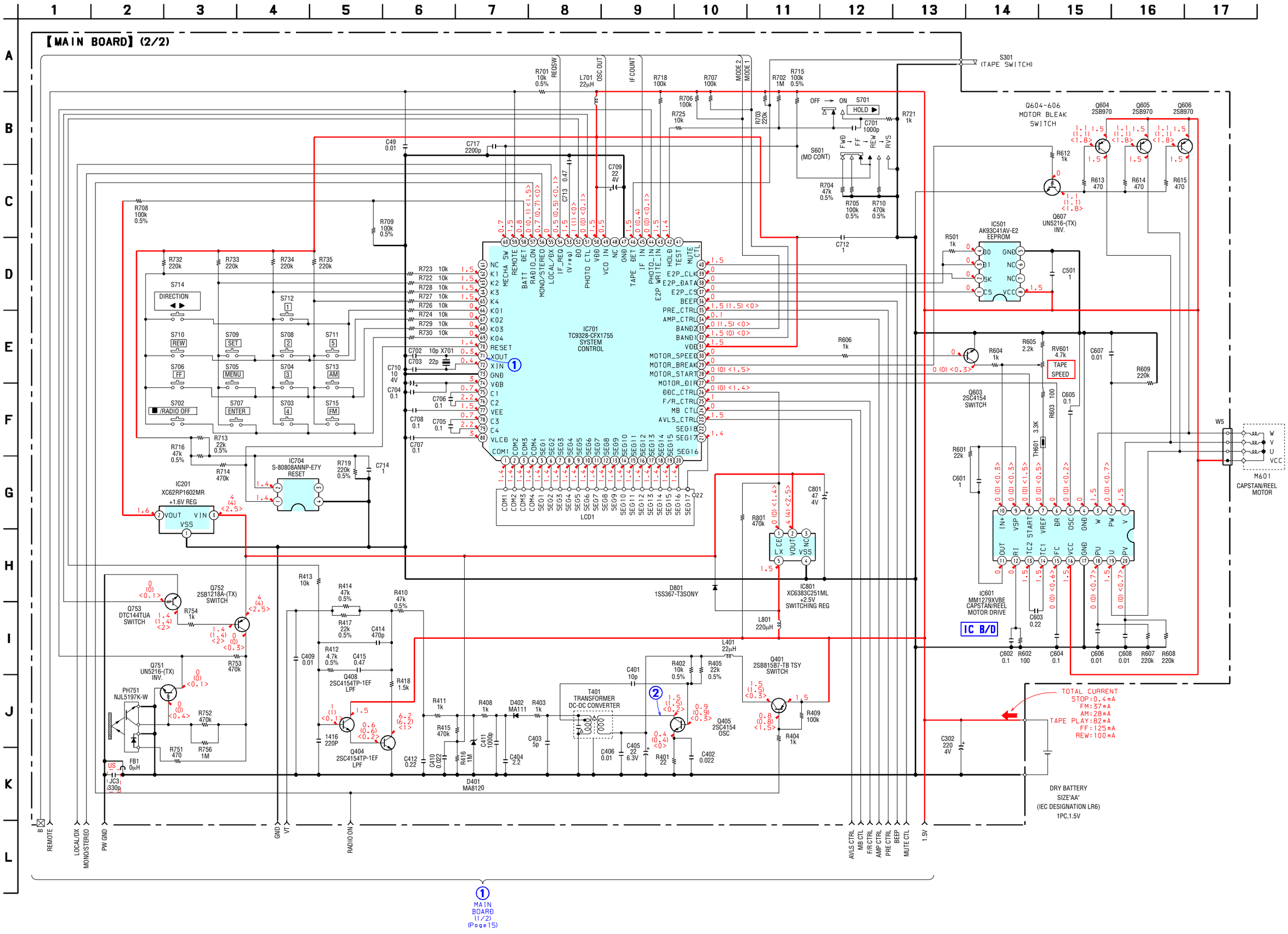

Note on Schematic Diagram

- All capacitors are in μF unless otherwise noted. pF: μμF 50 WV or less are not indicated except for electrolytics and tantalums.
- All resistors are in Ω and 1/4 W or less unless otherwise specified.
- △ : internal component.
- ▭ : panel designation.
- ▬ : B+ Line.
- ▭ : adjustment for repair.
- Power voltage is dc 1.5V and fed with regulated dc power supply from battery terminal.
- Voltages and waveforms are dc with respect to ground under no-signal (detuned) conditions.
- no mark : FM
  ( ) : AM
  < > : Tape Play
- Voltages are taken with a VOM (Input impedance 10 MΩ). Voltage variations may be noted due to normal production tolerances.
- Waveforms are taken with a oscilloscope. Voltage variations may be noted due to normal production tolerances.
- Circled numbers refer to waveforms.
- Signal path.
  : PB
  : FM
  : AM

Note on Printed Wiring Board

- ○——— : parts extracted from the component side.
- ○ : Through hole.
- ▬ : Pattern from the side which enables seeing.

(The other layers' patterns are not indicated.)

Caution:	
Pattern face side: (Side B)	Parts on the pattern face side seen from the pattern face are indicated.
Parts face side: (Side A)	Parts on the parts face side seen from the parts face are indicated.

● **Waveforms**

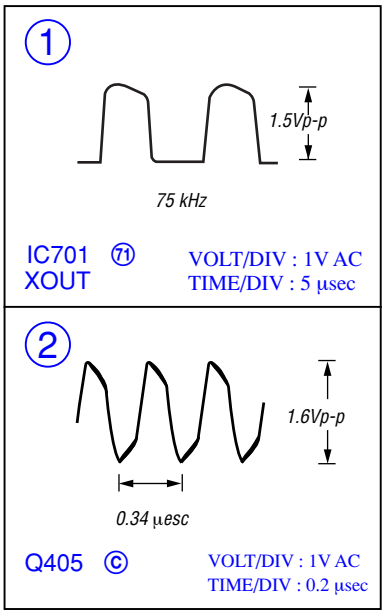

5-5. IC BLOCK DIAGRAMS

IC1 TA2154FN (EL)

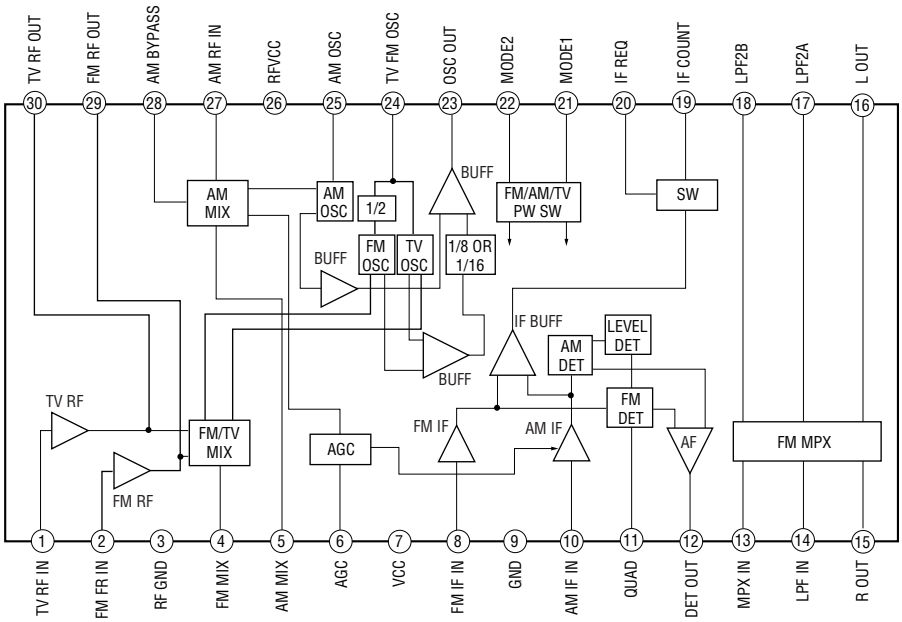

IC301 TA2160FN (EL)

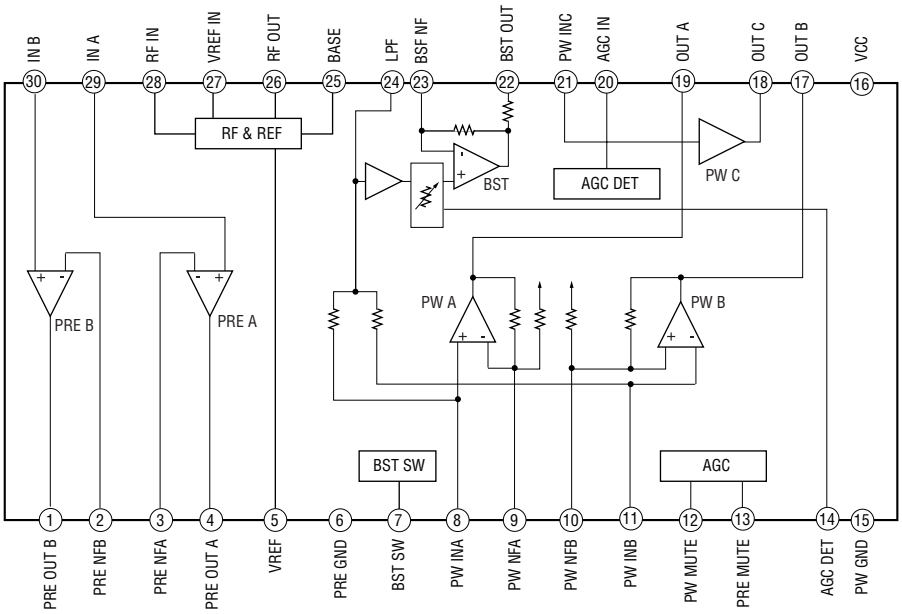

IC601 MM1279XVBE

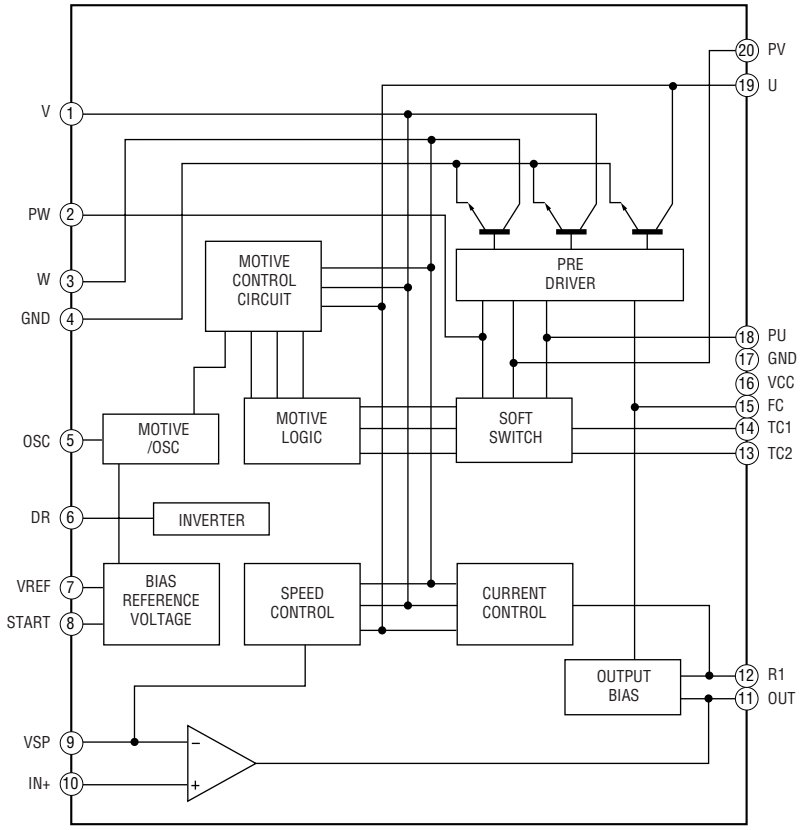

SECTION 6
EXPLODED VIEWS

NOTE :
- -XX, -X mean standardized parts, so they may have some difference from the original one.
- Color indication of Appearance Parts
  Example :
  KNOB, BALANCE (WHITE) ••• (RED)
  ↑ Parts color ↑ Cabinet's color
- Items marked " * "are not stocked since they are seldom required for routine service. Some delay should be anticipated when ordering these items.
- The mechanical parts with no reference number in the exploded views are not supplied.
- Hardware (# mark) list and accessories and packing materials are given in the last of this parts list.

6-1. CABINET SECTION

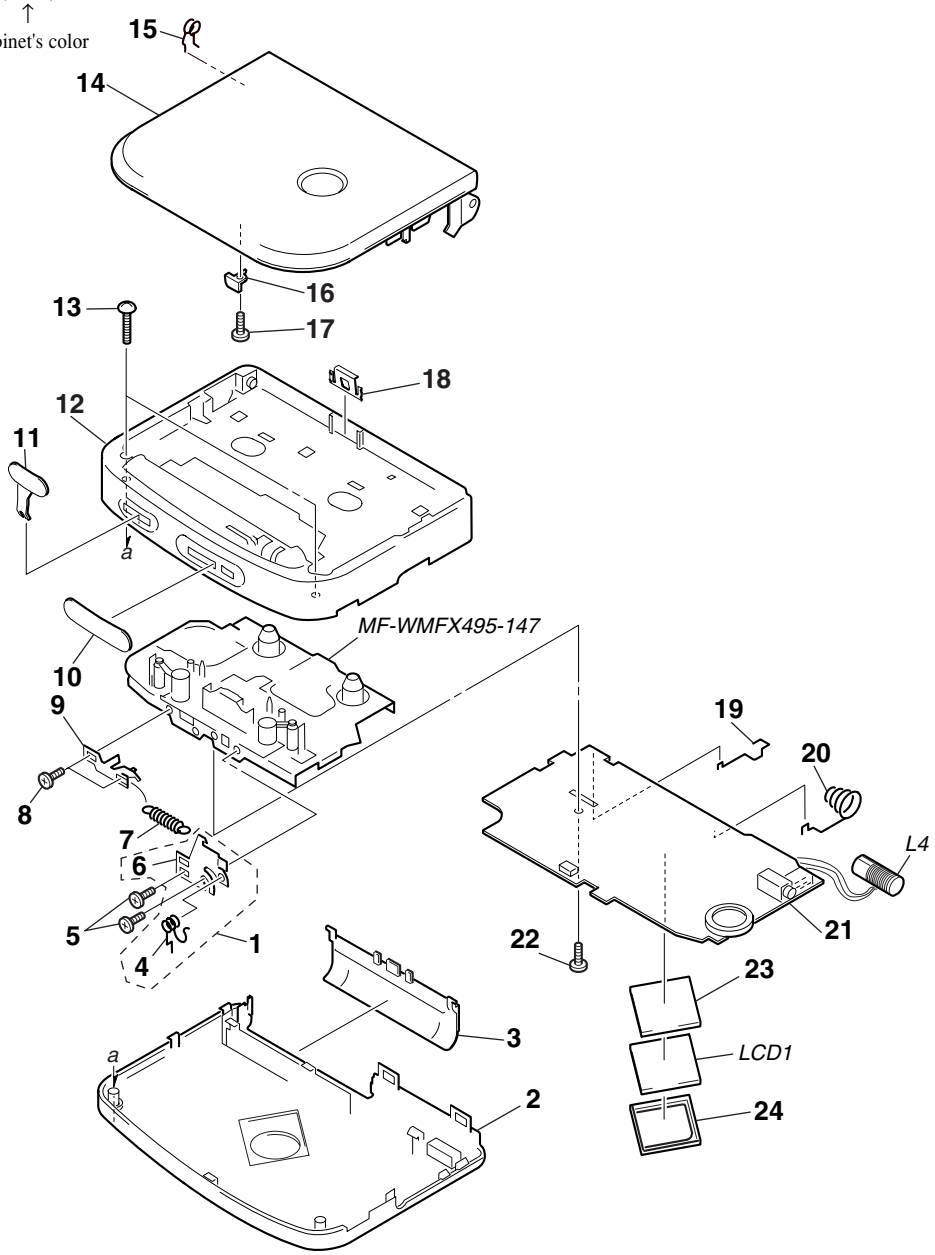

Ref. No.	Part No.	Description	Remark
1	X-3383-898-1	LEVER OPEN ASSY	
2	X-2024-093-1	CABINET FRONT ASSY (SILVER) (US)	
2	X-3384-757-1	CABINET FRONT ASSY (SILVER) (AEP)	
2	X-3384-758-1	CABINET FRONT ASSY (BLUE) (AEP)	
3	3-252-498-01	LID, BATTERY (SILVER)	
3	3-252-498-11	LID, BATTERY (BLUE) (AEP)	
4	3-022-857-01	SPRING (OPEN)	
5	3-704-197-91	SCREW (M1.4X1.8), LOCKING	
6	3-252-507-01	LEVER OPEN	
7	3-022-856-01	SPRING (KNOB), TENSION	
8	3-349-825-11	SCREW	
9	3-019-422-03	JOINT	
10	3-252-499-01	KNOB (OPEN) (SILVER)	
10	3-252-499-11	KNOB (OPEN) (BLUE)	
11	3-252-500-01	KNOB (HOLD) (SILVER)	
11	3-252-500-11	KNOB (HOLD) (BLUE)	
12	3-252-494-01	CABINET (CENTER) (SILVER)	

Ref. No.	Part No.	Description	Remark
12	3-252-494-11	CABINET (CENTER) (BLUE)	
13	3-318-203-91	SCREW (B1.7X9), TAPPING	
14	X-3383-382-1	HOLDER SUB ASSY, CASSETTE (SILVER)	
14	X-3383-383-1	HOLDER SUB ASSY, CASSETTE (BLUE)	
15	3-025-276-02	SPRING (LID UP)	
16	3-039-661-01	LOCKER (OPEN)	
17	3-375-114-21	SCREW	
18	3-245-293-01	SPRING (CASSETTE)	
19	3-252-508-01	TERMINAL BATTERY (+)	
20	3-252-509-01	TERMINAL BATTERY (-)	
* 21	A-3683-571-A	MAIN PC BOARD ASSY (AEP)	
* 21	A-3683-575-A	MAIN PC BOARD ASSY (US)	
22	3-704-197-11	LOCK, SERRAT IB	
23	3-252-724-01	RUBBER, CONDUCTIVE	
24	3-252-505-01	HOLDER LCD	
L4	1-754-287-11	COIL, FERRITE-ROD ANTENNA (MW)	
LCD1	1-805-199-11	DISPLAY PANEL, LIQUID CRYSTAL	

6-2. MECHANISM DECK SECTION (MF-WMFX495-147)

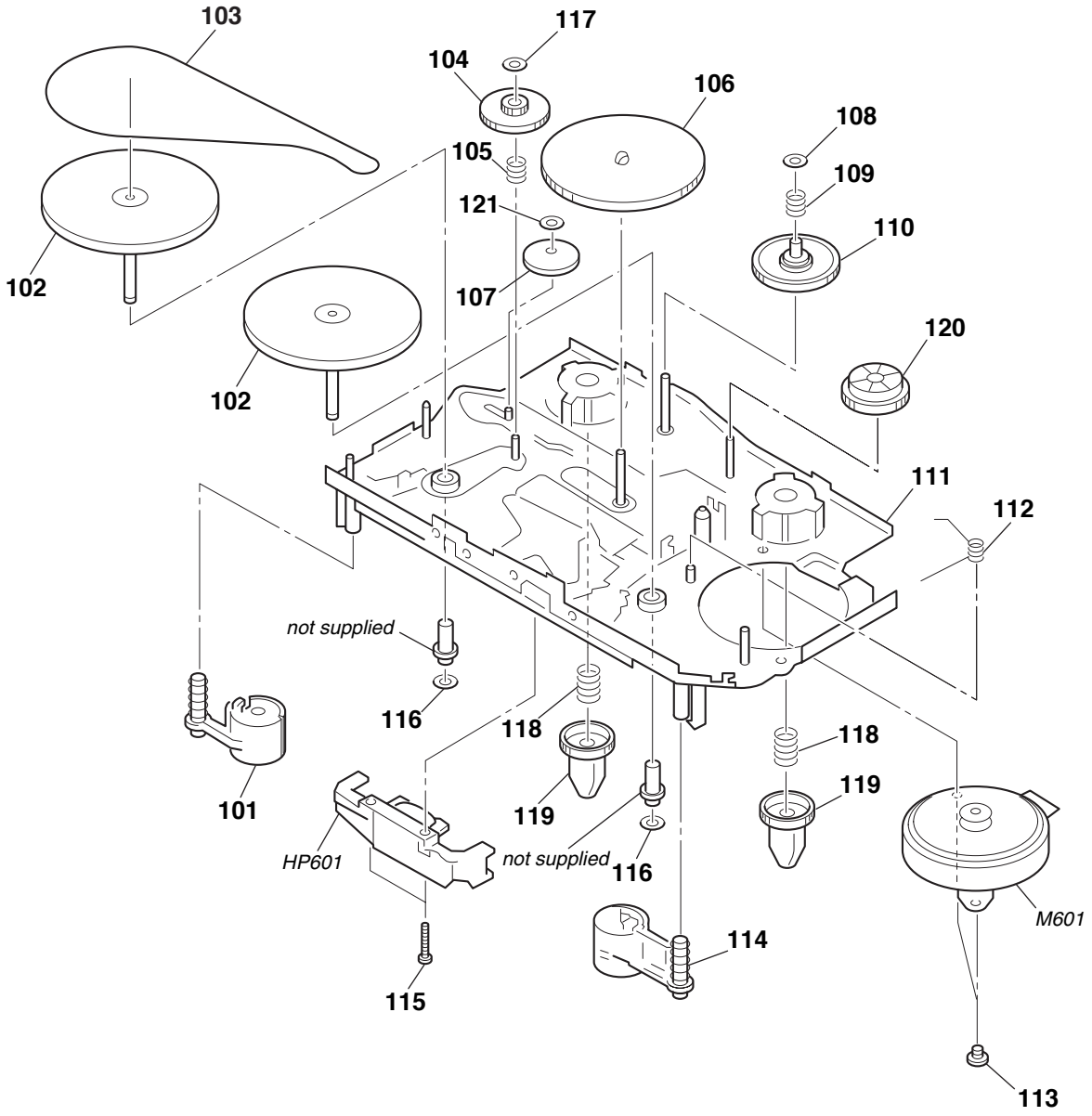

Ref. No.	Part No.	Description	Remark
101	X-3375-020-2	PINCH LEVER (N-F) ASSY	
102	X-3372-619-1	WHEEL ASSY (NP), CAPSTAN	
103	3-354-868-01	BELT	
104	3-021-950-02	GEAR (DF)	
105	3-021-982-01	SPRING (MODE), COMPRESSION	
106	X-3375-024-4	CLUTCH ASSY (F)	
107	3-021-951-02	GEAR (CAM)	
108	3-348-953-21	WASHER	
109	3-021-979-02	SPRING (UDF), COMPRESSION	
110	3-021-949-01	GEAR (BF)	
111	X-3375-022-7	CHASSIS ASSY (F)	
112	3-021-974-04	SPRING (HEAD BASE)	
113	3-238-876-04	SCREW (M1.4), TOOTHED LOCK	
114	X-3375-021-3	PINCH LEVER (R-F) ASSY	
115	3-704-197-71	SCREW (M1.4x4.5)	
116	3-921-797-01	WASHER	
117	3-338-647-31	WASHER (1.0-2.5)	
118	3-022-100-01	SPRING (B.T.), COMPRESSION	
119	3-024-223-11	GEAR (REEL-2)	
120	X-3375-268-1	GEAR (AF-SV) ASSY	
121	3-034-685-01	WASHER (1.03-3.0)	
HP601	1-500-648-11	HEAD, MAGNETIC (PLAYBACK)	
M601	1-763-798-11	MOTOR, DC (CAPSTAN/REEL) (including PULLEY)	

SECTION 7
ELECTRICAL PARTS LIST

MAIN

NOTE :
- Due to standardization, replacements in the parts list may be different from the parts specified in the diagrams or the components used on the set.
- -XX, -X mean standardized parts, so they may have some difference from the original one.
- RESISTORS
  All resistors are in ohms
  METAL : Metal-film resistor
  METAL OXIDE :Metal oxide-film resistor
  F : nonflammable
- Items marked " * "are not stocked since they are seldom required for routine service. Some delay should be anticipated when ordering these items.
- SEMICONDUCTORS
  In each case, u : μ , for example :
  uA.... : μ A.... , uPA.... : μ PA....
  uPB.... : μ PB.... , uPC.... : μ PC....
  uPD.... : μ PD....
- CAPACITORS
  uF : μ F
- COILS
  uH : μ H

When indicating parts by reference number, please include the board.

Ref. No.	Part No.	Description			Remark
*	A-3683-571-A	MAIN BOARD, COMPLETE (AEP)			
*	A-3683-575-A	MAIN BOARD, COMPLETE (US)			
		**********			
		< CAPACITOR >			
C1	1-164-874-11	CERAMIC CHIP	100PF	5%	50V
C2	1-135-151-21	TANTALUM CHIP	4.7uF	20%	4V
C3	1-164-937-11	CERAMIC CHIP	0.001uF	10%	50V
C4	1-125-777-11	CERAMIC CHIP	0.1uF	10%	10V
C5	1-119-923-11	CERAMIC CHIP	0.047uF	10%	10V
C6	1-135-151-21	TANTALUM CHIP	4.7uF	20%	4V
C7	1-162-962-11	CERAMIC CHIP	470PF	10%	50V
C8	1-117-863-11	CERAMIC CHIP	0.47uF	10%	6.3V
C9	1-131-862-91	TANTAL. CHIP	47uF	20%	4V
C10	1-107-819-11	CERAMIC CHIP	0.022uF	10%	16V
C11	1-164-941-11	CERAMIC CHIP	0.0047uF	10%	16V (AEP)
C11	1-164-943-11	CERAMIC CHIP	0.01uF	10%	16V(US)
C12	1-164-941-11	CERAMIC CHIP	0.0047uF	10%	16V (AEP)
C12	1-164-943-11	CERAMIC CHIP	0.01uF	10%	16V(US)
C13	1-119-923-11	CERAMIC CHIP	0.047uF	10%	10V(US)
C13	1-125-777-11	CERAMIC CHIP	0.1uF	10%	10V (AEP)
C14	1-119-923-11	CERAMIC CHIP	0.047uF	10%	10V(US)
C14	1-125-777-11	CERAMIC CHIP	0.1uF	10%	10V (AEP)
C15	1-107-826-11	CERAMIC CHIP	0.1uF	10%	16V
C16	1-164-943-11	CERAMIC CHIP	0.01uF	10%	16V
C17	1-162-970-11	CERAMIC CHIP	0.01uF	10%	25V
C18	1-164-357-11	CERAMIC CHIP	0.001uF	5%	50V
C20	1-164-939-11	CERAMIC CHIP	0.0022uF	10%	50V
C21	1-164-939-11	CERAMIC CHIP	0.0022uF	10%	50V
C23	1-107-819-11	CERAMIC CHIP	0.022uF	10%	16V
C24	1-107-819-11	CERAMIC CHIP	0.022uF	10%	16V
C26	1-164-939-11	CERAMIC CHIP	0.0022uF	10%	50V(US)
C27	1-164-939-11	CERAMIC CHIP	0.0022uF	10%	50V
C28	1-164-315-11	CERAMIC CHIP	470PF	5%	50V
C29	1-164-850-11	CERAMIC CHIP	10PF	0.50PF	50V
C30	1-164-315-11	CERAMIC CHIP	470PF	5%	50V
C31	1-107-819-11	CERAMIC CHIP	0.022uF	10%	16V
C32	1-164-845-11	CERAMIC CHIP	5PF	0.25PF	50V(US)
C33	1-164-842-11	CERAMIC CHIP	2PF	0.25PF	50V(US)
C34	1-164-939-11	CERAMIC CHIP	0.0022uF	10%	50V
C35	1-164-939-11	CERAMIC CHIP	0.0022uF	10%	50V
C37	1-164-845-11	CERAMIC CHIP	5PF	0.25PF	50V
C40	1-164-840-11	CERAMIC CHIP	1PF	0.25PF	50V(US)
C40	1-164-842-11	CERAMIC CHIP	2PF	0.25PF	50V (AEP)
C41	1-164-357-11	CERAMIC CHIP	0.001uF	5%	50V
C42	1-164-845-11	CERAMIC CHIP	5PF	0.25PF	50V
C43	1-164-937-11	CERAMIC CHIP	0.001uF	10%	50V (AEP)
C44	1-164-937-11	CERAMIC CHIP	0.001uF	10%	50V (AEP)
C47	1-164-882-11	CERAMIC CHIP	220PF	5%	16V
C48	1-164-357-11	CERAMIC CHIP	0.001uF	5%	50V
C101	1-164-935-11	CERAMIC CHIP	470PF	10%	50V
C103	1-164-941-11	CERAMIC CHIP	0.0047uF	10%	16V
C104	1-104-847-11	TANTAL. CHIP	22uF	20%	4V
C106	1-115-156-11	CERAMIC CHIP	1uF		10V
C107	1-115-156-11	CERAMIC CHIP	1uF		10V
C108	1-164-937-11	CERAMIC CHIP	0.001uF	10%	50V
C109	1-165-128-11	CERAMIC CHIP	0.22uF		16V
C110	1-107-819-11	CERAMIC CHIP	0.022uF	10%	16V
C201	1-164-935-11	CERAMIC CHIP	470PF	10%	50V
C203	1-164-941-11	CERAMIC CHIP	0.0047uF	10%	16V
C204	1-104-847-11	TANTAL. CHIP	22uF	20%	4V
C206	1-115-156-11	CERAMIC CHIP	1uF		10V
C207	1-115-156-11	CERAMIC CHIP	1uF		10V
C208	1-164-937-11	CERAMIC CHIP	0.001uF	10%	50V
C209	1-165-128-11	CERAMIC CHIP	0.22uF		16V
C210	1-107-819-11	CERAMIC CHIP	0.022uF	10%	16V
C301	1-104-847-11	TANTAL. CHIP	22uF	20%	4V
C302	1-124-434-00	ELECT	220uF	20%	4V
C304	1-135-259-11	TANTAL. CHIP	10uF	20%	6.3V
C305	1-107-826-11	CERAMIC CHIP	0.1uF	10%	16V
C306	1-125-838-11	CERAMIC CHIP	2.2uF	10%	6.3V
C307	1-125-837-91	CERAMIC CHIP	1uF	10%	6.3V
C308	1-115-467-11	CERAMIC CHIP	0.22uF	10%	10V
C309	1-107-820-11	CERAMIC CHIP	0.1uF		16V
C310	1-165-128-11	CERAMIC CHIP	0.22uF		16V
C311	1-117-720-11	CERAMIC CHIP	4.7uF		10V
C312	1-125-838-11	CERAMIC CHIP	2.2uF	10%	6.3V
C313	1-165-176-11	CERAMIC CHIP	0.047uF	10%	16V
C316	1-115-156-11	CERAMIC CHIP	1uF		10V
C322	1-164-937-11	CERAMIC CHIP	0.001uF	10%	50V
C324	1-131-862-91	TANTAL. CHIP	47uF	20%	4V
C325	1-125-838-11	CERAMIC CHIP	2.2uF	10%	6.3V
C330	1-125-837-91	CERAMIC CHIP	1uF	10%	6.3V
C401	1-164-850-11	CERAMIC CHIP	10PF	0.50PF	50V
C402	1-107-819-11	CERAMIC CHIP	0.022uF	10%	16V
C403	1-164-845-11	CERAMIC CHIP	5PF	0.25PF	50V
C404	1-164-505-11	CERAMIC CHIP	2.2uF		16V
C405	1-119-750-11	TANTAL. CHIP	22uF	20%	6.3V
C406	1-164-943-11	CERAMIC CHIP	0.01uF	10%	16V
C409	1-164-943-11	CERAMIC CHIP	0.01uF	10%	16V

MAIN

Ref. No.	Part No.	Description			Remark
C410	1-107-819-11	CERAMIC CHIP	0.022uF	10%	16V
C411	1-164-937-11	CERAMIC CHIP	0.001uF	10%	50V
C412	1-165-128-11	CERAMIC CHIP	0.22uF		16V
C414	1-164-935-11	CERAMIC CHIP	470PF	10%	50V
C415	1-125-891-11	CERAMIC CHIP	0.47uF	10%	10V
C416	1-162-960-11	CERAMIC CHIP	220PF	10%	50V
C501	1-115-156-11	CERAMIC CHIP	1uF		10V
C601	1-125-837-91	CERAMIC CHIP	1uF	10%	6.3V
C602	1-125-777-11	CERAMIC CHIP	0.1uF	10%	10V
C603	1-115-467-11	CERAMIC CHIP	0.22uF	10%	10V
C604	1-164-156-11	CERAMIC CHIP	0.1uF		25V
C605	1-107-826-11	CERAMIC CHIP	0.1uF	10%	16V
C606	1-162-970-11	CERAMIC CHIP	0.01uF	10%	25V
C607	1-162-970-11	CERAMIC CHIP	0.01uF	10%	25V
C608	1-162-970-11	CERAMIC CHIP	0.01uF	10%	25V
C700	1-164-939-11	CERAMIC CHIP	0.0022uF	10%	50V
C701	1-164-937-11	CERAMIC CHIP	0.001uF	10%	50V
C702	1-162-915-11	CERAMIC CHIP	10PF	0.5PF	50V
C703	1-164-858-11	CERAMIC CHIP	22PF	5%	50V
C704	1-107-820-11	CERAMIC CHIP	0.1uF		16V
C705	1-107-820-11	CERAMIC CHIP	0.1uF		16V
C706	1-107-820-11	CERAMIC CHIP	0.1uF		16V
C707	1-107-820-11	CERAMIC CHIP	0.1uF		16V
C708	1-107-820-11	CERAMIC CHIP	0.1uF		16V
C709	1-104-847-11	TANTAL. CHIP	22uF	20%	4V
C710	1-135-201-11	TANTALUM CHIP	10uF	20%	4V
C712	1-115-156-11	CERAMIC CHIP	1uF		10V
C713	1-117-863-11	CERAMIC CHIP	0.47uF	10%	6.3V
C714	1-115-156-11	CERAMIC CHIP	1uF		10V
C719	1-164-939-11	CERAMIC CHIP	0.0022uF	10%	50V
C801	1-131-862-91	TANTAL. CHIP	47uF	20%	4V
		< FILTER >			
CF1	1-577-574-11	FILTER, CERAMIC			
CF2	1-781-271-11	FILTER, CERAMIC			
CT1	1-141-327-11	CAP, CHIP TYPE TRIMMER 10PF			
		< DIODE >			
D1	8-759-072-60	IC Z84C4306FEC			
D2	8-719-080-77	DIODE MA2S357(E)-(TX).SO (US)			
D3	8-719-080-77	DIODE MA2S357(E)-(TX).SO			
D4	8-719-080-77	DIODE MA2S357(E)-(TX).SO			
D5	6-500-174-01	DIODE MA2SP0100LSO (US)			
D401	8-719-158-49	DIODE RD12SB2			
D402	8-719-404-50	DIODE MA111-TX			
D801	8-719-049-09	DIODE 1SS367-T3SONY			
		< FERRITE BEAD >			
FB1	1-414-760-21	FERRITE	0uH		
FB2	1-414-760-21	FERRITE	0uH		
FB3	1-414-760-21	FERRITE	0uH		
FB303	1-414-760-21	FERRITE	0uH		
FB304	1-414-760-21	FERRITE	0uH		
FB305	1-414-760-21	FERRITE	0uH		
FB306	1-414-760-21	FERRITE	0uH		
FB307	1-414-760-21	FERRITE	0uH		
		< IC >			
IC1	6-701-310-01	IC TA2154FN(EL)			
IC201	8-759-457-70	IC XC62RP1602MR			
IC301	6-701-831-01	IC TA2160FN(EL)			
IC601	8-759-356-46	IC MM1279XVBE			
IC701	6-802-987-01	IC TC9328AF-117			
IC704	8-759-572-21	IC S-80808ANNP-E7Y-T2			
IC801	8-759-553-28	IC XC6383C251ML			
		< JACK >			
J301	1-785-164-12	JACK (Ω)			
		< JUMPER RESISTOR >			
JC1	1-216-864-11	METAL CHIP	0	5%	1/10W (AEP)
JC2	1-216-864-11	METAL CHIP	0	5%	1/10W (AEP)
JC3	1-163-193-00	CERAMIC CHIP	330PF	5%	50V(US)
		< COIL >			
L2	1-424-998-11	COIL, AIR-CORE	(US)		
L3	1-400-215-21	INDUCTOR	22NH (US)		
L3	1-400-216-21	INDUCTOR	15uH (AEP)		
L5	1-428-859-11	COIL (AM OSC) (AM FREQUENCY COVERAGE)			
L6	1-412-967-31	INDUCTOR	0.1uH (US)		
L7	1-456-416-11	COIL (FM RF) (FM TRACKING) (AEP)			
L7	1-456-417-11	COIL (FM RF) (FM TRACKING) (US)			
L16	1-412-967-31	INDUCTOR	0.1uH		
L401	1-412-010-41	INDUCTOR	22uH		
L701	1-412-010-41	INDUCTOR	22uH		
L801	1-412-033-11	INDUCTOR CHIP	220uH		
		< REFLECTOR >			
PH751	8-749-016-61	REFLECTOR	NJL5197K-W-F20(TE1)		
		< TRANSISTOR >			
Q2	8-729-800-71	TRANSISTOR	2SB815B7-TB		
Q101	8-729-230-72	TRANSISTOR	2SA1362YG		
Q102	8-729-230-72	TRANSISTOR	2SA1362YG		
Q201	8-729-230-72	TRANSISTOR	2SA1362YG		
Q202	8-729-230-72	TRANSISTOR	2SA1362YG		
Q301	8-729-230-49	TRANSISTOR	2SC2712-YG		
Q302	8-729-230-72	TRANSISTOR	2SA1362YG		
Q303	8-729-429-44	TRANSISTOR	XP1501		
Q304	8-729-800-71	TRANSISTOR	2SB815B7-TB		
Q305	8-729-425-94	TRANSISTOR	XP1116-TXE		
Q401	8-729-800-71	TRANSISTOR	2SB815B7-TB		
Q404	8-729-602-21	TRANSISTOR	2SC4154-F		
Q405	8-729-602-21	TRANSISTOR	2SC4154-F		
Q408	8-729-602-21	TRANSISTOR	2SC4154-F		
Q603	8-729-602-21	TRANSISTOR	2SC4154-F		
Q604	8-729-046-90	TRANSISTOR	2SB970-(TX).S0		
Q605	8-729-046-90	TRANSISTOR	2SB970-(TX).S0		
Q606	8-729-046-90	TRANSISTOR	2SB970-(TX).S0		
Q607	8-729-421-26	TRANSISTOR	UN5216QRS		
Q751	8-729-421-26	TRANSISTOR	UN5216QRS		
Q752	8-729-420-24	TRANSISTOR	2SB1218A-QRS		
Q753	8-729-029-15	TRANSISTOR	DTC144TUA-T106		
		< RESISTOR >			
R1	1-218-953-11	RES-CHIP	1K	5%	1/16W
R2	1-218-965-11	RES-CHIP	10K	5%	1/16W
R3	1-218-871-11	METAL CHIP	10K	0.5%	1/10W
R4	1-216-825-11	METAL CHIP	2.2K	5%	1/10W

MAIN

Ref. No.	Part No.	Description			Remark
R6	1-216-845-11	METAL CHIP	100K	5%	1/10W
R7	1-216-833-11	METAL CHIP	10K	5%	1/10W
R8	1-216-853-11	METAL CHIP	470K	5%	1/10W
R9	1-216-853-11	METAL CHIP	470K	5%	1/10W
R10	1-218-977-11	RES-CHIP	100K	5%	1/16W
R11	1-218-953-11	RES-CHIP	1K	5%	1/16W (US)
R12	1-218-953-11	RES-CHIP	1K	5%	1/16W (US)
R17	1-216-821-11	METAL CHIP	1K	5%	1/10W
R18	1-218-977-11	RES-CHIP	100K	5%	1/16W
R21	1-218-965-11	RES-CHIP	10K	5%	1/16W
R22	1-218-871-11	METAL CHIP	10K	0.5%	1/10W
R101	1-218-965-11	RES-CHIP	10K	5%	1/16W
R103	1-218-985-11	RES-CHIP	470K	5%	1/16W
R104	1-216-817-11	METAL CHIP	470	5%	1/10W
R105	1-208-635-11	RES-CHIP	10	5%	1/16W
R106	1-216-849-11	METAL CHIP	220K	5%	1/10W
R107	1-216-825-11	METAL CHIP	2.2K	5%	1/10W (AEP)
R107	1-216-829-11	METAL CHIP	4.7K	5%	1/10W (US)
R109	1-220-803-81	RES-CHIP	4.7	5%	1/16W
R110	1-218-953-11	RES-CHIP	1K	5%	1/16W
R111	1-218-981-11	RES-CHIP	220K	5%	1/16W
R112	1-216-809-11	METAL CHIP	100	5%	1/10W (AEP)
R112	1-216-864-11	METAL CHIP	0	5%	1/10W (US)
R113	1-216-829-11	METAL CHIP	4.7K	5%	1/10W
R114	1-216-821-11	METAL CHIP	1K	5%	1/10W
R121	1-218-969-11	RES-CHIP	22K	5%	1/16W
R201	1-218-965-11	RES-CHIP	10K	5%	1/16W
R203	1-218-985-11	RES-CHIP	470K	5%	1/16W
R204	1-218-949-11	RES-CHIP	470	5%	1/16W
R205	1-216-797-11	METAL CHIP	10	5%	1/10W
R206	1-216-849-11	METAL CHIP	220K	5%	1/10W
R207	1-218-957-11	RES-CHIP	2.2K	5%	1/16W (AEP)
R207	1-218-961-11	RES-CHIP	4.7K	5%	1/16W (US)
R209	1-220-803-81	RES-CHIP	4.7	5%	1/16W
R210	1-218-953-11	RES-CHIP	1K	5%	1/16W
R211	1-218-981-11	RES-CHIP	220K	5%	1/16W
R212	1-216-809-11	METAL CHIP	100	5%	1/10W (AEP)
R212	1-216-864-11	METAL CHIP	0	5%	1/10W (US)
R213	1-216-829-11	METAL CHIP	4.7K	5%	1/10W
R214	1-216-821-11	METAL CHIP	1K	5%	1/10W
R221	1-218-969-11	RES-CHIP	22K	5%	1/16W
R301	1-218-977-11	RES-CHIP	100K	5%	1/16W
R302	1-216-845-11	METAL CHIP	100K	5%	1/10W
R303	1-216-841-11	METAL CHIP	47K	5%	1/10W
R304	1-216-821-11	METAL CHIP	1K	5%	1/10W
R305	1-218-985-11	RES-CHIP	470K	5%	1/16W
R307	1-218-977-11	RES-CHIP	100K	5%	1/16W
R308	1-216-825-11	METAL CHIP	2.2K	5%	1/10W
R309	1-216-841-11	METAL CHIP	47K	5%	1/10W
R310	1-220-803-81	RES-CHIP	4.7	5%	1/16W
R311	1-218-977-11	RES-CHIP	100K	5%	1/16W
R312	1-216-845-11	METAL CHIP	100K	5%	1/10W
R330	1-216-821-11	METAL CHIP	1K	5%	1/10W
R331	1-216-821-11	METAL CHIP	1K	5%	1/10W
R333	1-218-941-81	RES-CHIP	100	5%	1/16W
R334	1-216-841-11	METAL CHIP	47K	5%	1/10W
R401	1-218-933-11	RES-CHIP	22	5%	1/16W
R402	1-208-707-11	METAL CHIP	10K	0.5%	1/16W
R403	1-218-953-11	RES-CHIP	1K	5%	1/16W
R404	1-216-821-11	METAL CHIP	1K	5%	1/10W
R405	1-208-715-11	METAL CHIP	22K	0.5%	1/16W
R408	1-218-953-11	RES-CHIP	1K	5%	1/16W
R409	1-216-845-11	METAL CHIP	100K	5%	1/10W
R410	1-218-887-11	METAL CHIP	47K	0.5%	1/10W
R411	1-216-821-11	METAL CHIP	1K	5%	1/10W
R412	1-208-699-11	METAL CHIP	4.7K	0.5%	1/16W
R413	1-218-965-11	RES-CHIP	10K	5%	1/16W
R414	1-218-887-11	METAL CHIP	47K	0.5%	1/10W
R415	1-218-985-11	RES-CHIP	470K	5%	1/16W
R416	1-218-989-11	RES-CHIP	1M	5%	1/16W
R417	1-218-879-11	METAL CHIP	22K	0.5%	1/10W
R418	1-208-687-11	METAL CHIP	1.5K	0.5%	1/16W
R501	1-216-821-11	METAL CHIP	1K	5%	1/10W
R601	1-216-837-11	METAL CHIP	22K	5%	1/10W
R602	1-216-809-11	METAL CHIP	100	5%	1/10W
R603	1-216-809-11	METAL CHIP	100	5%	1/10W
R604	1-216-821-11	METAL CHIP	1K	5%	1/10W
R605	1-216-825-11	METAL CHIP	2.2K	5%	1/10W
R606	1-216-821-11	METAL CHIP	1K	5%	1/10W
R607	1-216-849-11	METAL CHIP	220K	5%	1/10W
R608	1-216-849-11	METAL CHIP	220K	5%	1/10W
R609	1-216-849-11	METAL CHIP	220K	5%	1/10W
R612	1-216-821-11	METAL CHIP	1K	5%	1/10W
R613	1-216-817-11	METAL CHIP	470	5%	1/10W
R614	1-216-817-11	METAL CHIP	470	5%	1/10W
R615	1-216-817-11	METAL CHIP	470	5%	1/10W
R701	1-218-871-11	METAL CHIP	10K	0.5%	1/10W
R702	1-216-857-11	METAL CHIP	1M	5%	1/10W
R703	1-218-981-11	RES-CHIP	220K	5%	1/16W
R704	1-218-887-11	METAL CHIP	47K	0.5%	1/10W
R705	1-218-895-11	METAL CHIP	100K	0.5%	1/10W
R706	1-216-845-11	METAL CHIP	100K	5%	1/10W
R707	1-216-845-11	METAL CHIP	100K	5%	1/10W
R708	1-208-935-11	METAL CHIP	100K	0.5%	1/16W
R709	1-208-935-11	METAL CHIP	100K	0.5%	1/16W
R710	1-218-911-11	METAL CHIP	470K	0.5%	1/10W
R713	1-208-715-11	METAL CHIP	22K	0.5%	1/16W
R714	1-218-985-11	RES-CHIP	470K	5%	1/16W
R715	1-218-895-11	METAL CHIP	100K	0.5%	1/10W
R716	1-208-927-11	METAL CHIP	47K	0.5%	1/16W
R718	1-216-845-11	METAL CHIP	100K	5%	1/10W
R719	1-208-943-11	METAL CHIP	220K	0.5%	1/16W
R721	1-216-821-11	METAL CHIP	1K	5%	1/10W
R722	1-216-833-11	METAL CHIP	10K	5%	1/10W
R723	1-218-965-11	RES-CHIP	10K	5%	1/16W
R724	1-216-833-11	METAL CHIP	10K	5%	1/10W
R725	1-216-833-11	METAL CHIP	10K	5%	1/10W
R726	1-218-965-11	RES-CHIP	10K	5%	1/16W
R727	1-216-833-11	METAL CHIP	10K	5%	1/10W
R728	1-216-833-11	METAL CHIP	10K	5%	1/10W
R729	1-216-833-11	METAL CHIP	10K	5%	1/10W
R730	1-216-833-11	METAL CHIP	10K	5%	1/10W
R732	1-216-849-11	METAL CHIP	220K	5%	1/10W

MAIN

Ref. No.	Part No.	Description			Remark
R733	1-218-981-11	RES-CHIP	220K	5%	1/16W
R734	1-218-981-11	RES-CHIP	220K	5%	1/16W
R735	1-216-849-11	METAL CHIP	220K	5%	1/10W
R751	1-216-817-11	METAL CHIP	470	5%	1/10W
R752	1-216-853-11	METAL CHIP	470K	5%	1/10W
R753	1-216-853-11	METAL CHIP	470K	5%	1/10W
R754	1-216-821-11	METAL CHIP	1K	5%	1/10W
R756	1-216-857-11	METAL CHIP	1M	5%	1/10W
R801	1-216-853-11	METAL CHIP	470K	5%	1/10W
		< VARIABLE RESISTOR >			
RV301	1-225-953-11	RES, VAR, MAIN CARBON 10K/10K (◣ VOL)			
RV601	1-223-258-11	RES, CARBON ADJ VAR 4.7K (TAPE SPEED)			
		< SWITCH >			
S301	1-771-040-21	SWITCH, PUSH (TAPE SW)			
S601	1-771-598-11	SWITCH, SLIDE (MD COMT)			
S701	1-572-922-11	SWITCH, SLIDE (HOLD►)			
S702	1-771-851-21	SWITCH, TACTILE (SMD) (■/RADIO OFF)			
S703	1-771-851-21	SWITCH, TACTILE (SMD) (4)			
S704	1-771-851-21	SWITCH, TACTILE (SMD) (3)			
S705	1-771-851-21	SWITCH, TACTILE (SMD) (MENU)			
S706	1-771-851-21	SWITCH, TACTILE (SMD) (FF)			
S707	1-771-851-21	SWITCH, TACTILE (SMD) (ENTER)			
S708	1-771-851-21	SWITCH, TACTILE (SMD) (2)			
S709	1-771-851-21	SWITCH, TACTILE (SMD) (SET)			
S710	1-771-851-21	SWITCH, TACTILE (SMD) (REW)			
S711	1-771-851-21	SWITCH, TACTILE (SMD) (5)			
S712	1-771-851-21	SWITCH, TACTILE (SMD) (1)			
S713	1-771-851-21	SWITCH, TACTILE (SMD) (AM)			
S714	1-771-851-21	SWITCH, TACTILE (SMD) (◄►,DIRECTION)			
S715	1-771-851-21	SWITCH, TACTILE (SMD) (FM)			
		< TRANSFORMER >			
T401	1-437-599-21	TRANSFORMER, DC-DC CONVERTER			
		< THERMISTOR >			
TH601	1-810-794-11	THERMISTOR, POSITIVE			
		< VIBRATOR >			
X1	1-795-411-21	FILTER, CERAMIC			
X701	1-577-262-11	VIBRATOR, CRYSTAL (75kHz)			

****

MISCELLANEOUS
****

Ref. No.	Part No.	Description	Remark
HP601	1-500-648-11	HEAD, MAGNETIC (PLAYBACK)	
L4	1-754-287-11	ANTENNA, FERRITE-ROD (AM TRACKING)	
LCD1	1-805-199-11	DISPLAY PANEL, LIQUID CRYSTAL	
M601	1-763-798-11	MOTOR, DC (CAPSTAN/REEL) (including PULLEY)	

****

ACCESSORIES
****

Ref. No.	Part No.	Description	Remark
	A-3608-889-A	REMOTE CONTROL ASSY (RM-WMF5)	
	3-253-259-11	MANUAL, INSTRUCTION (ENGLISH) (US)	
	3-253-259-21	MANUAL, INSTRUCTION (FRENCH, GERMAN, ITALIAN)	(AEP)
	3-253-259-31	MANUAL, INSTRUCTION (SPANISH, PORTUGUESE, DUTCH)	(AEP)
	3-253-259-41	MANUAL, INSTRUCTION (SWEDISH, FINNISH, RUSSIAN)	(AEP)
	3-253-259-51	MANUAL, INSTRUCTION (HUNGARIAN, CZECH, POLISH)	(AEP)
	3-253-259-61	MANUAL, INSTRUCTION (GREEK, TURKISH, SLOVAKIAN)	(AEP)
	3-253-259-91	MANUAL, INSTRUCTION (ENGLISH, SIMPLIFIED CHINESE)	(AEP)
	8-954-007-91	RECEIVER, EAR MDR-027SP (US)	
	8-954-008-90	RECEIVER, EAR MDR-E808SP (AEP)	

MEMO

REVISION HISTORY

Clicking the version allows you to jump to the revised page.
Also, clicking the version at the upper right on the revised page allows you to jump to the next revised page.

Ver.	Date	Description of Revision
1.0	2003.02	New
1.1	2003.10	Changes into the model for repair. (RPC-03001)
1.2	2005.12	Change of supply classification of Ref. No. 1 rubber and addition of Ref. No. 1 lever open ASSY. (SPM-05201)